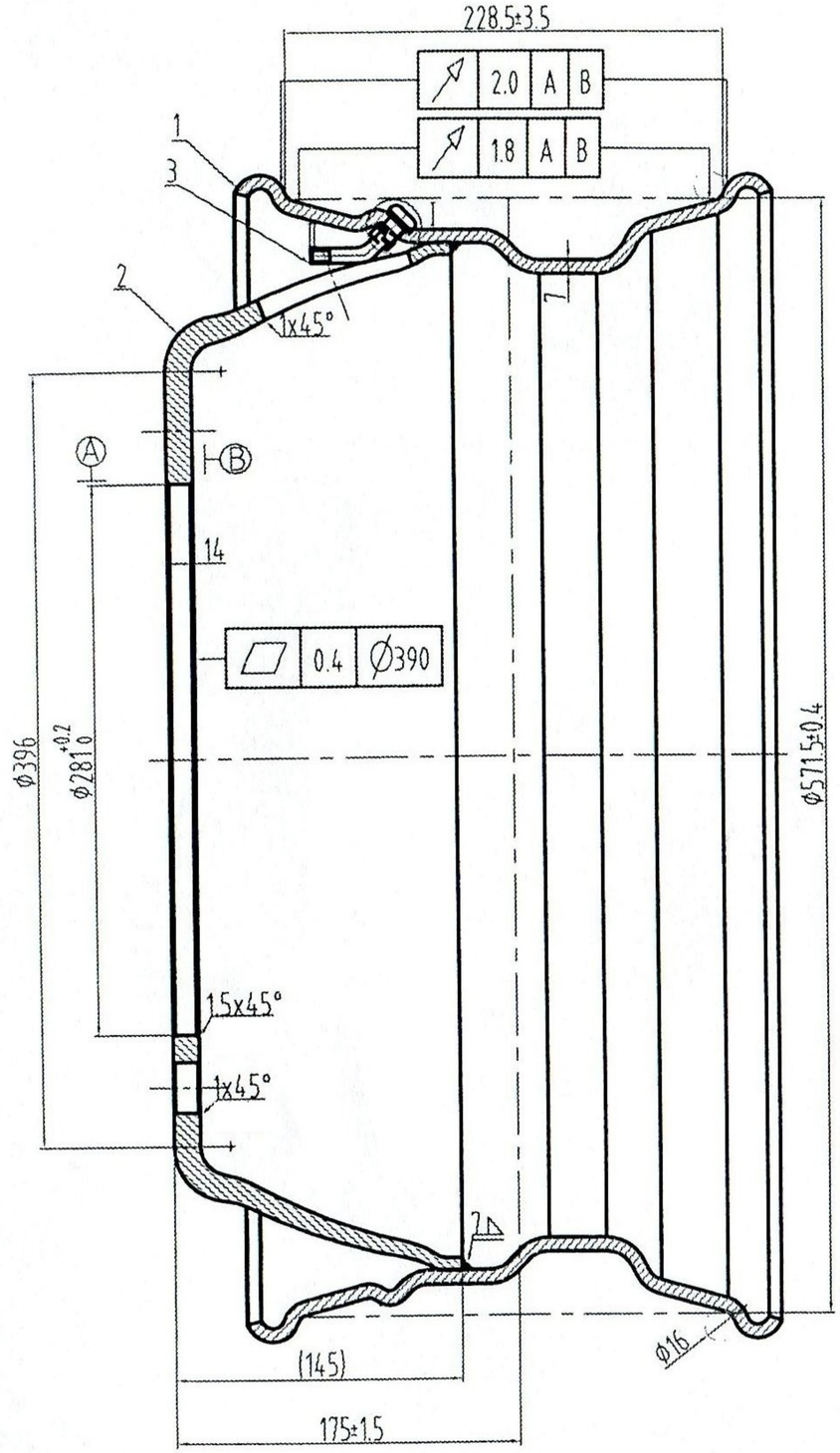
228.5±3.5
2.0 A B
1.8 A B
1
3
2
1x45°
A
B
14
0.4 Ø390
Ø396
Ø281 +0.2 0
Ø571.5±0.4
1.5x45°
1x45°
(145)
175±1.5
Ø16

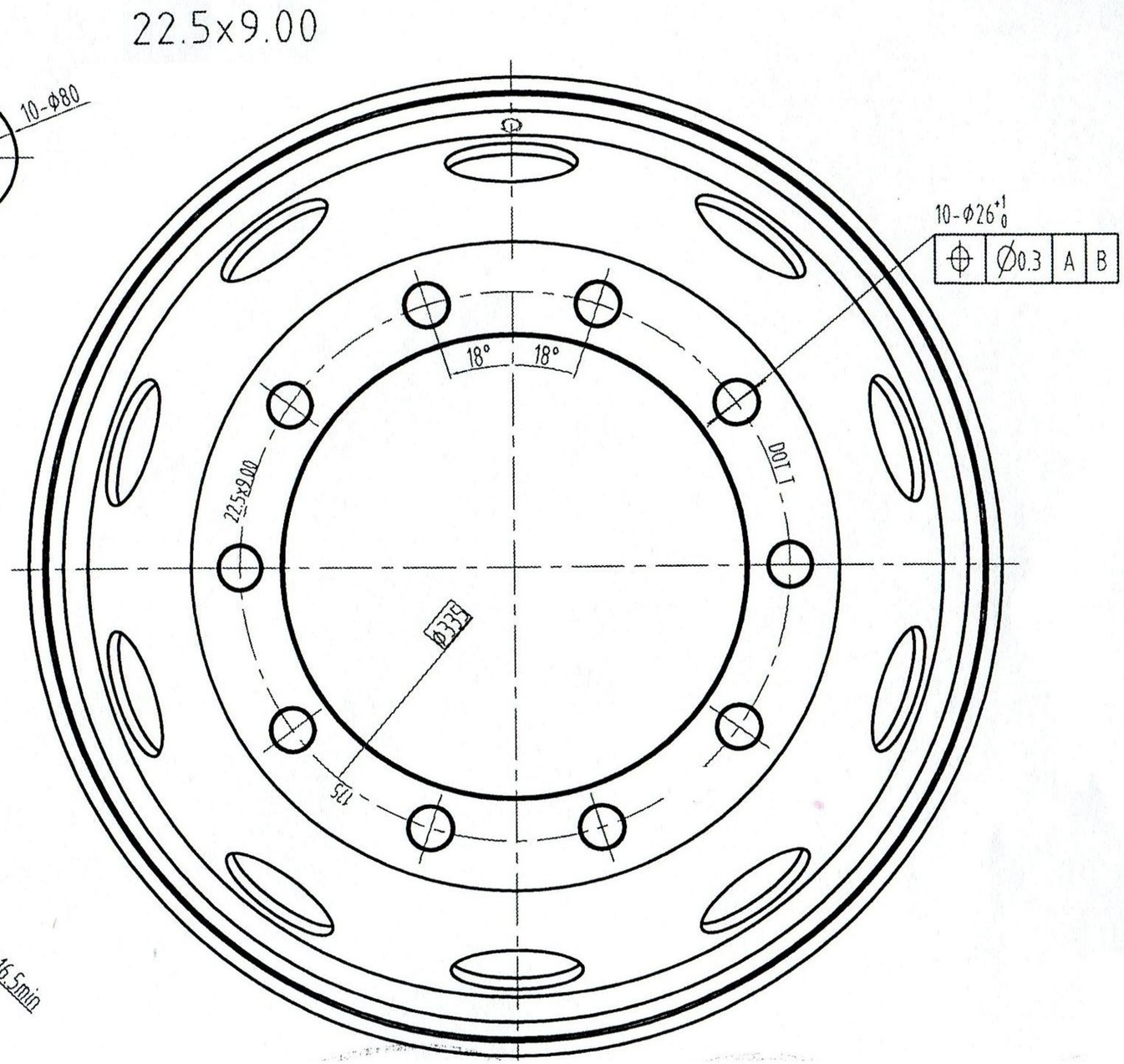
22.5x9.00
10-Ø80
10-Ø26 +1 0
Ø0.3 A B
18°
18°
22.5x9.00
100
Ø335
125

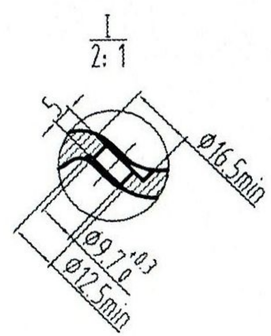
2:1
Ø16.5min
Ø9.7 +0.3 0
Ø12.5min